1 Kit 187011

INFINITI Q30, 5-dr Hatchback, 16-19
MERCEDES A-Class (W176), 5-dr Hatchback, 12–18

ISO 11154-E

This kit is only for vehicles with fixpoint mounting.

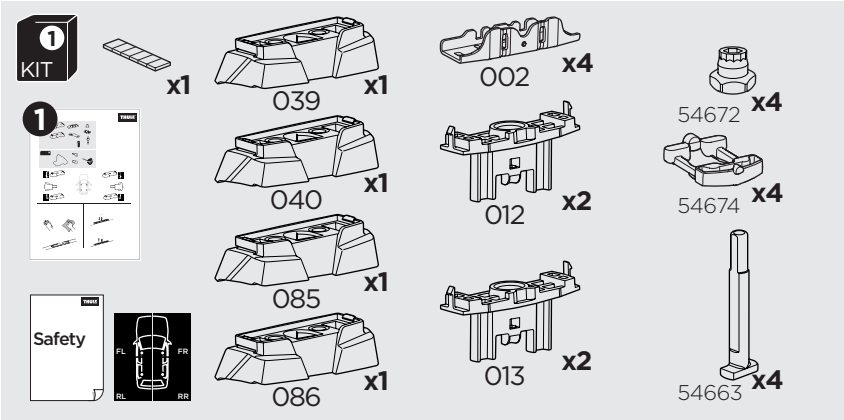

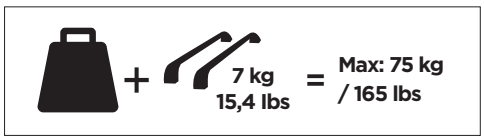

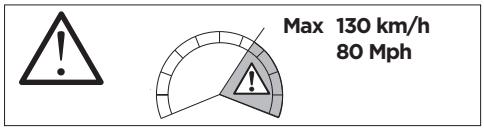

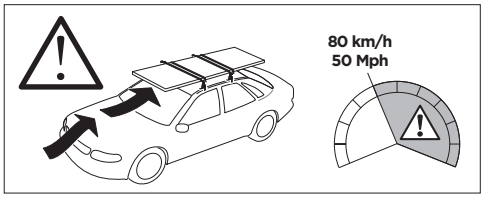

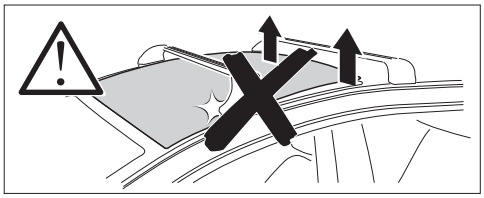

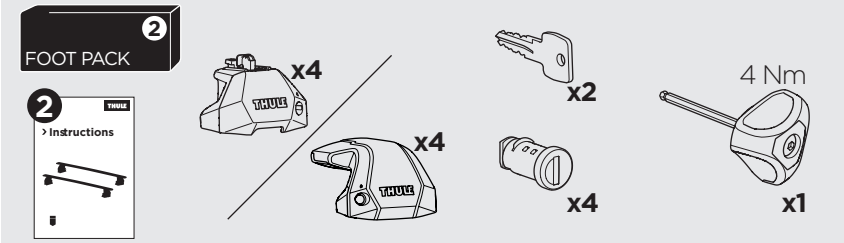

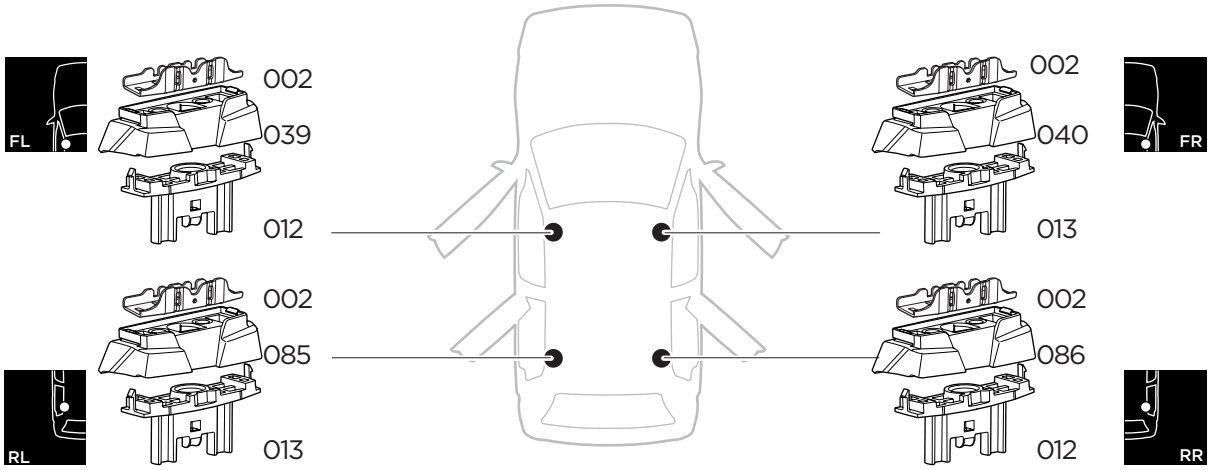

1

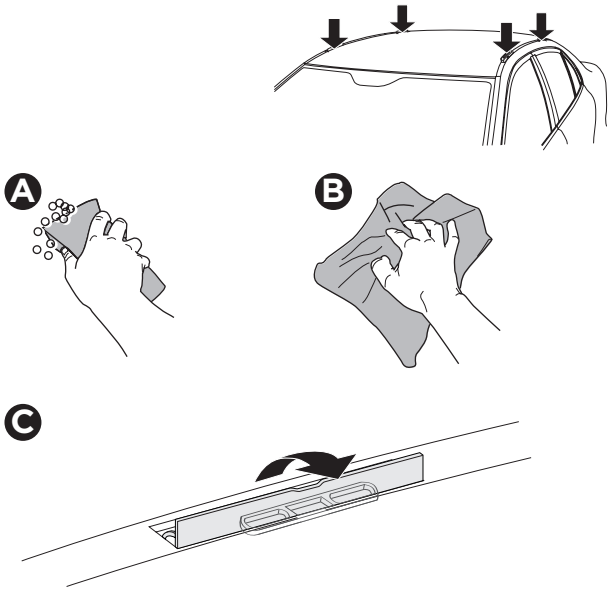

2

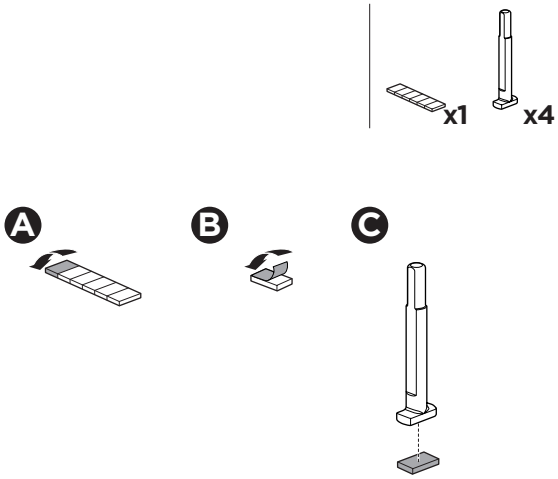

5561041001

Bring your life
thule.com

3

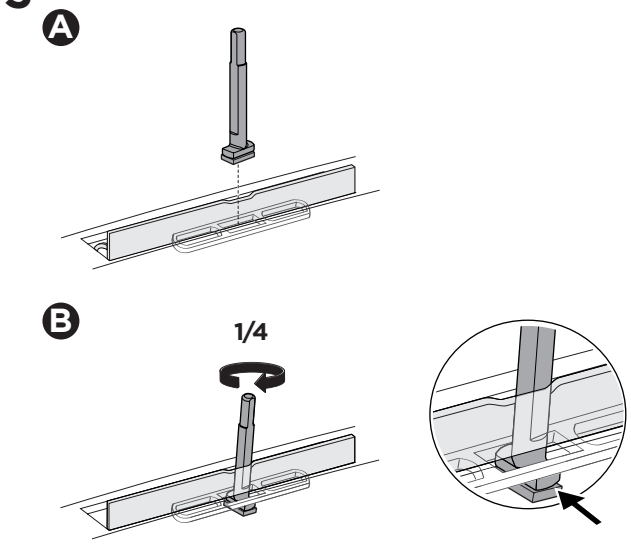

4

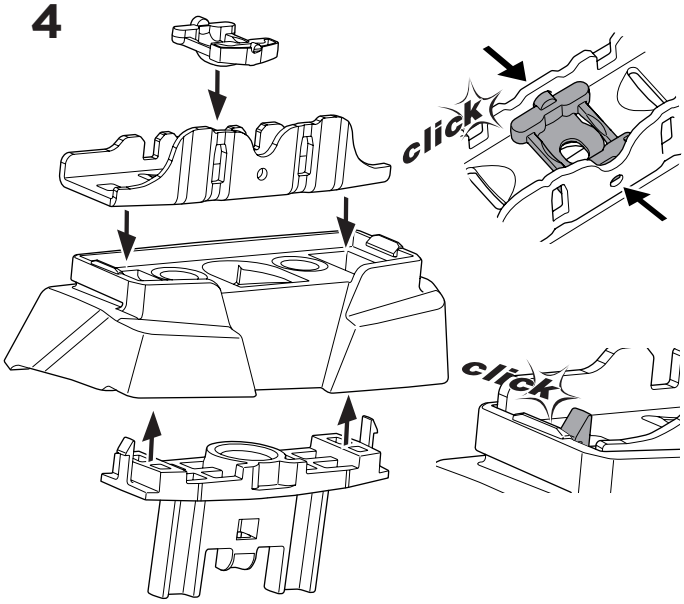

5

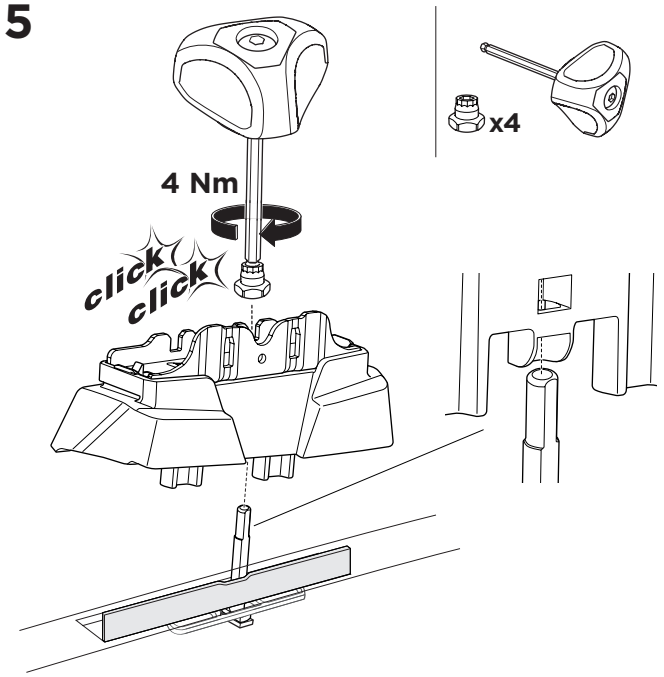

6

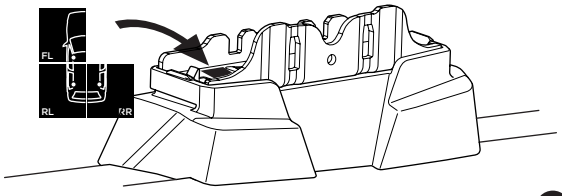

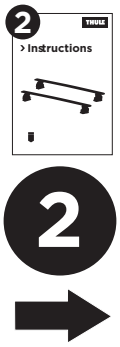

2

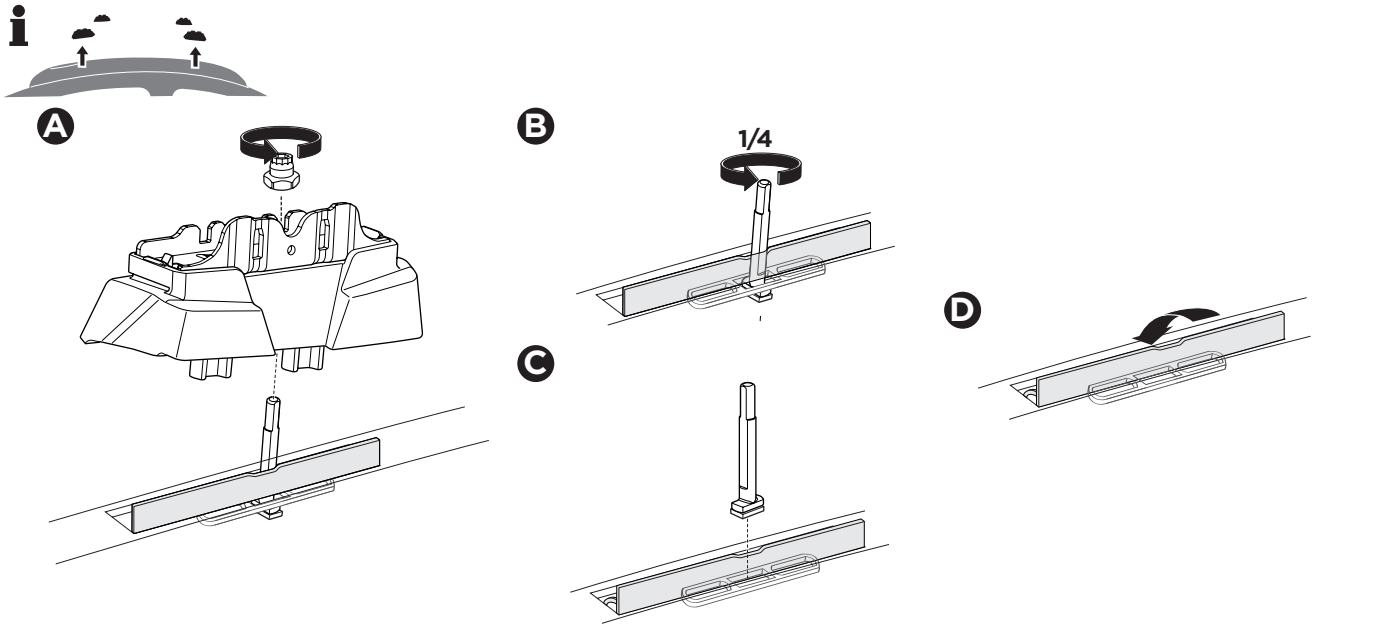

Thule Sweden AB, Borggatan 5
335 73 Hillerstorp, SWEDEN
info@thule.com
www.thule.com

PART OF THULE GROUP
© Thule Group 2021. All rights reserved.

5561041001